Modeling and Real Time Simulation of Wind Power Systems Using Rt-Lab Platform

KHIAT Mounir, BENAAMA Kamel, KELKOUL Ilyes
Laboratory SCAMRE, ENPO-MA , Oran, Algeria
Khiat2_2000@yahoo.fr

Plan of presentation

1- Introduction

2- Real-Time Simulation

3- RT-LAB Platform In SCAMRE Laboratory

4- Modeling and Real Time Simulation of Wind Power Systems

5- Results and Discussion

6- Conclusion

1- Introduction

In response to the increasing demands of electrical systems for performance, reliability and cost, The control and protection equipments has become increasingly sophisticated.

It is essential to validate these equipment before they are installed on the real power system.

To accelerate the development and validation cycle of these equipments, to reduce costs and risks, the current trend is to test these equipments with a real-time digital simulator.

2- Real-Time Simulation

The objective of the real - time simulator is to test the different electrical equipments in the most natural possible conditions: as if they were connected to the real physical systems associated with them.

Therefore, the real-time simulator must reproduce as closely as possible the dynamic behavior of the electrical system under control.

The real-time simulation of the electrical system to be controlled passes first through:

1- A modeling phase that consists in the putting of equation of the system.

2-Then a phase of conception of an algorithmic specification (choice of sampling period, discretization and quantification)

3- And finally, a phase of real - time implantation.

Among the real-time digital simulators used in the world, are:

- RT-LAB of OPAL-RT Technologies (CANADA).
- ARENE URT (EDF R&D, France).
- RTDS (RTDS Inc.,Manitoba/Canada).
- NETOMAC (SIEMENS, Allemagne).
- Etc.

3- RT-LAB Platform In SCAMRE Laboratory

The real-time simulator used in our SCAMRE laboratory is the RT-LAB digital simulator developed by OPAL-RT Technologies (Montreal, Canada).

RT-LAB Platform in SCAMRE Laboratory

OPAL-RT TECHNOLOGIES

AC / DC / AC converter (Triphase), 17 KW, connected to the real-time simulator.

3.1 Hardware Architecture

The hardware architecture installed within our laboratory SCAMRE, it is composed of two connected simulators, the Wanda 4u and the OP 5600 . The target is equipped with two CPU processers (Intel Xenon six-core, 3.33 GHZ, 12 M, 6.4 GT/s), including 2 cores enabled and 16 I/O, for Wanda and two CPU processers (Intel Xenon six-core, 3.46 GHZ, 12 M, 6.4 GT/s) including 2 cores enabled and 16 I/O, for OP5600

The target is responsible for the execution of models. Development, edit, verification, and compilation of models are all done on the host computer; moreover, it works as a console or command station in charge of control and observation during simulation. Ethernet is used to communicate between hosts and targets. Communication among nodes is used by shared-memory architecture. The host computer is a general PC.

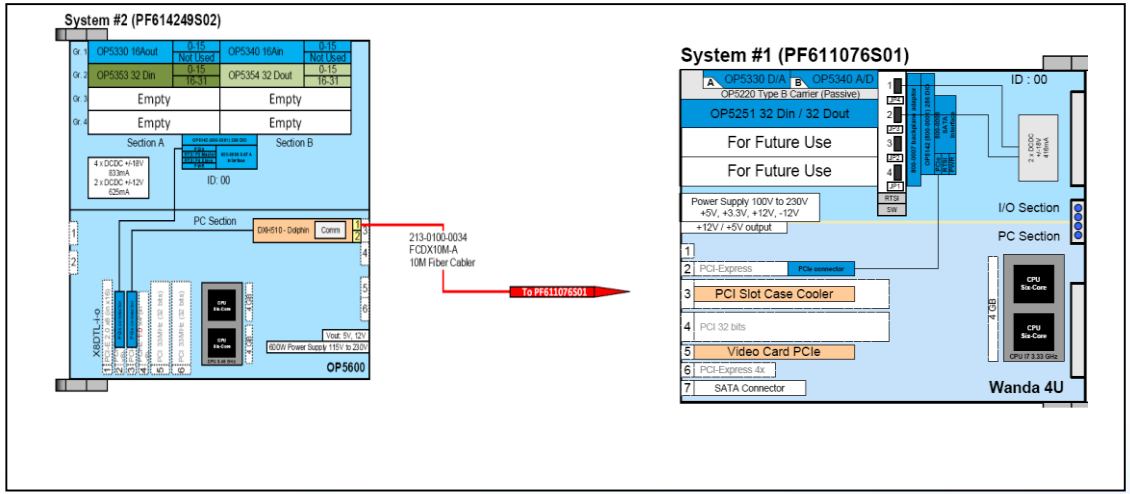

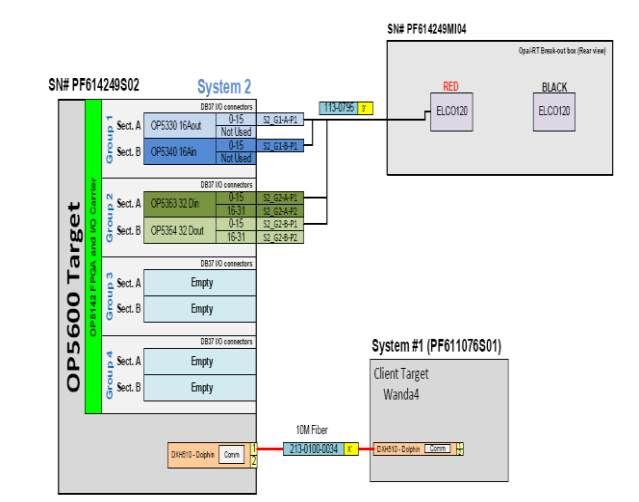

System Hardware Overview for op5600 and Wanda 4u

System Connection Overview

3.2. Software Architecture

The figure represents the software architecture on the host. All the studied models are developed under the Matlab/Simulink environment. RT-LAB is a real-time GUI platform and it is designed to make the real-time simulation of the Simulink models on the clusters. RT-LAB builds parallel tasks from the original Simulink models and run them on each core of the multi-core CPU computer or on the separate computers.

Software Architecture

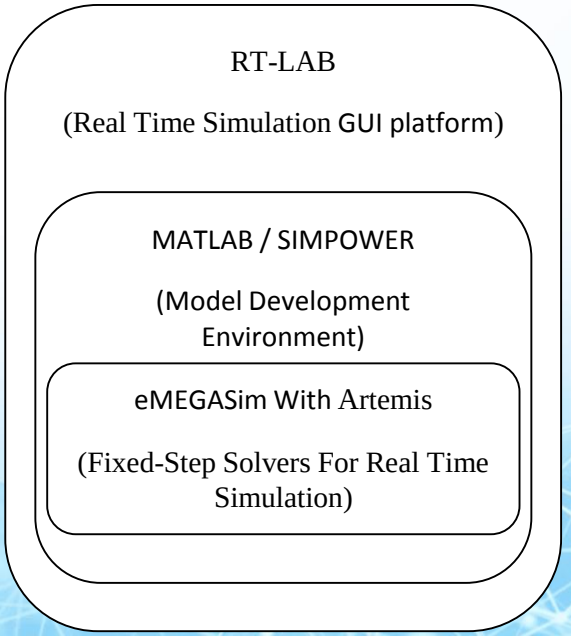

In the RT-LAB simulation platform, a solver named Artemis which is designed specifically for power system can improve the simulation speed greatly, and the multi-processor operating mode makes it available to do real-time simulations on RT-LAB platform by separating a complex system to some simple subsystems and do parallel operations in multiprocessor.

RT-LAB can also connect physical devices to the simulation system to make the simulation closer to the reality and to get more convincing results.

4- Modeling and Real Time Simulation of Wind Power Systems

4.1 Wind turbine system configuration

The dominant technology for utility-scale applications is the horizontal axis wind turbine. Typical ratings range from 500 kW to 5 MW. It must be noted that the power output is inherently fluctuating and non-dispatchable. A typical wind turbine consists of the following subsystems:

-Rotor (consists of blades and hub);

- Drive-train (shafts, gearbox, couplings, mechanical brake, and electrical generator) ;
- Nacelle and main-frame (housing, bedplate, and yaw system);
- Tower and foundation;
- Electrical system (cables, switchgear, transformers, and power electronic converters if present).

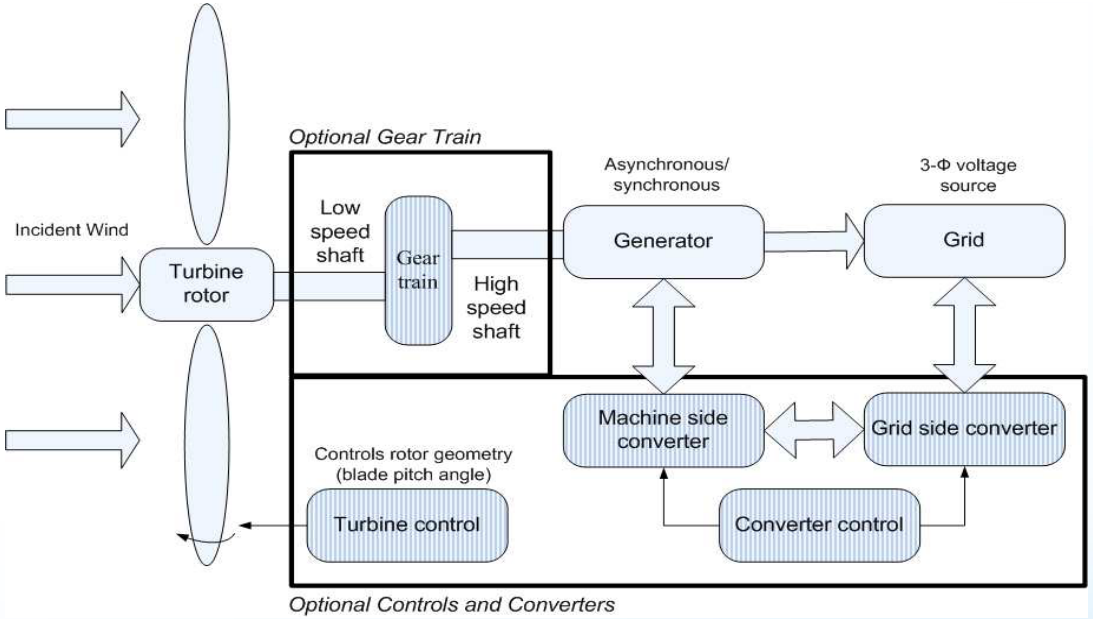

Modern wind turbine diagram

This presentation, describes the detailed modeling and simulation of a wind farm based on **Doubly-Fed Induction Generators** (DFIG), integrated in to the power grid.

The main advantage of the DFIG is the possibility of operating at variable speed, For it, the system of DFIG adjusts the speed of the rotor depending on the wind speed.

Indeed, the DFIG allows to run in hyposynchronous and hypersynchronous generator. Thus we arrive to extract maximum possible power.

The interest of the variable speed for a wind turbine is to be able to run over a wide range of wind speeds and to get the maximum power possible for each wind speed.

The DFIG configuration in which the voltage on the stator is applied from the grid and the voltage on the rotor is induced by the rotor-side converter. The frequency difference between the mechanical frequency (rotor side) and the electrical frequency (stator side) is compensated through a converter that injects a variable frequency rotor current both in normal and fault condition operation.

4.2 DFIG Model

Today, 80% of new aerogenerators contain Doubly Fed Asynchronous (with rotor coil).

One characteristic of the DFIG-based wind turbine system is the bidirectional power flow of the rotor. When $\omega_r > \omega_s$ the power flows from the rotor to the power network. When $\omega_r < \omega_s$, the rotor absorbs the energy from the power network

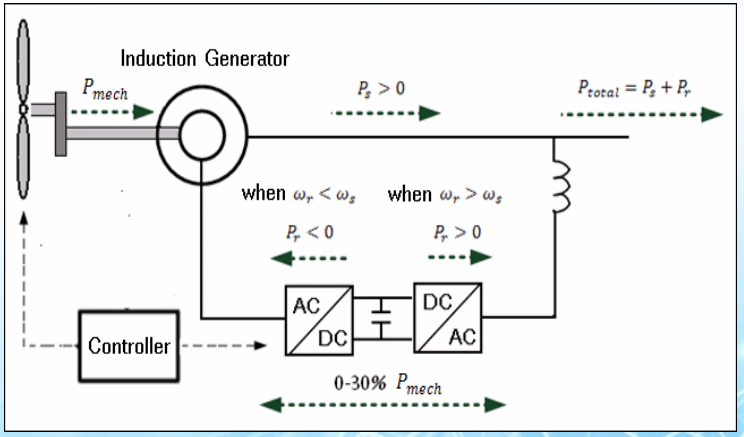

System Diagram of a DFIG-Based Wind Turbine System

4.3 Implementation

The model of the power system used in this study, is Composed of a 12 DFIG connected to a system of transmission to high voltage 220KV with 19 buses, power stations of generation (synchronous machines and regulators), and 11 loads. The nominal operating frequency of the network is 50 Hz.

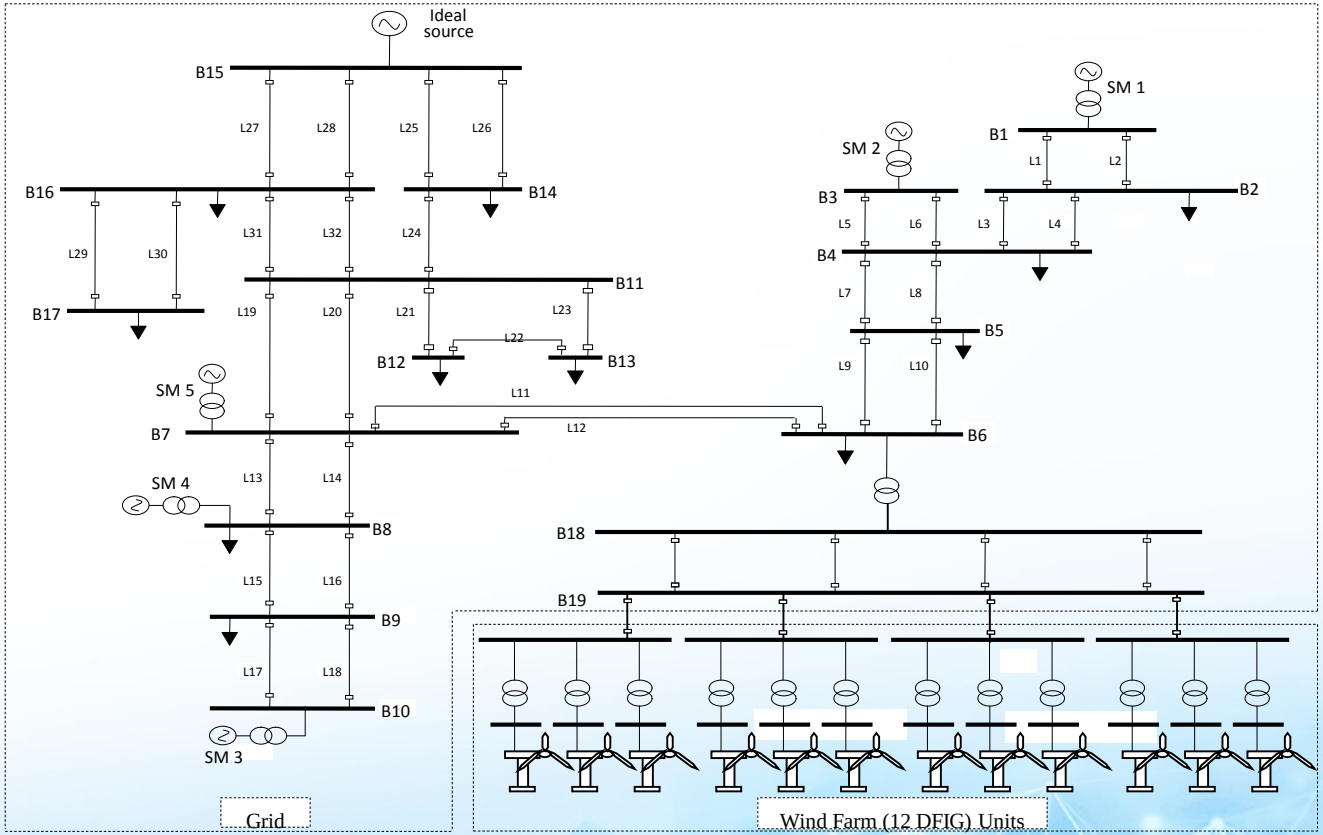

Single-line diagram of the power system under investigation

4.3.1 Model description

The transmission grid is divided into two subsystems namely "SS_NETWORK_A" and "SS_NETWORK_B". SS NETWORK_A consists of the swing bus, buses (07) to (17), seven loads and three power stations of generation. Buses (1) to (6) and buses (18) and (19) are located in SS_NETWORK_B which contains also two power stations of generation. This subsystem also consists of four loads and a tie in to the wind farm. The regulation and control of generators are placed in SM _Control subsystem. Thewind farm subsystem is designated by SS_Wind Farm and it is connected to the transmission system.

The WANDA and OP5600 digital simulators are limited by the number of processors enabled on the simulation target. In the case of this study, the maximum number of active processors (CPU) licensed was four, hence the power system could be broken into a maximum four subsystems, as shown in Figure .

The first CPU takes in charge the synchronous generators and their regulator simulation. The 19 buses are distributed on CPU 2 and CPU 3 as shown in figures 15 and 16, respectively; the last CPU is reserved to the simulation of twelve DFIGs with their controls.

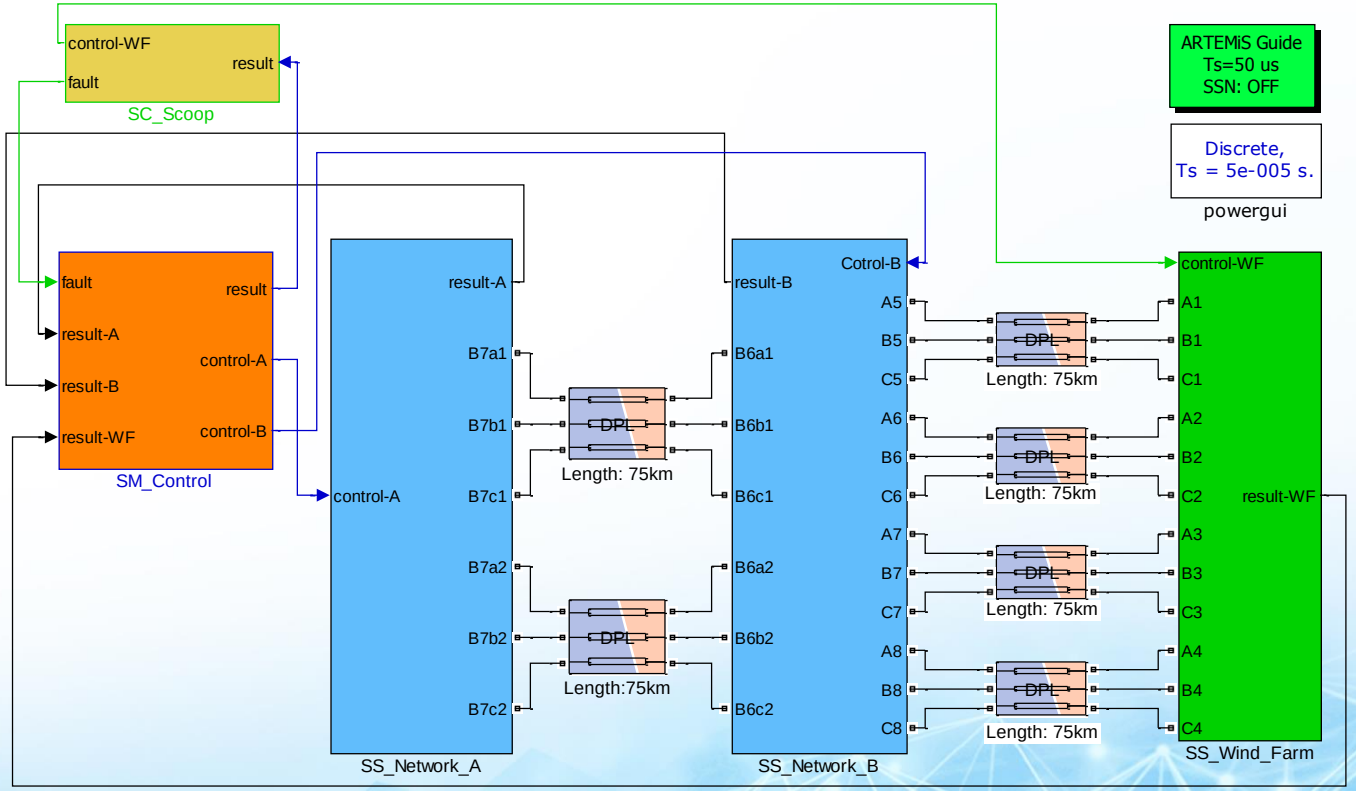

Model Implementation of Park Aerogenerators Integrated Network.

5 Results and discussion

The system is running at the real time step of 50 µs. The parameters of the DFIG based wind turbine are shown in next table. As can be seen from next figure 18, the adopt wind profile varies between 8m/s and 12m/s for turbines in Wind-Farm subsystem.

Wind turbine (DFIG) parameters

Parameter	Value
Nominal power	1 MVA
Gear ratio	80.27
Line to line voltage	400 V
Frequency	50 HZ
DC-bus voltage	1250 V
Pole pairs	1
Stator resistant	0.0256294 pu
Rotor resistant	0.0100649 pu
Stator inductor	0.0998644 pu
Rotor inductor	9.62367 pu
Mutual inductance	3.47857 pu
Generator inertia	0.62 kg m^2
Filter inductor	0.001 H
DC-bus capacitor	0.025 F
Kp and Ki for Pitch control PI	150 , 50
Kp and Ki for Pitch compensation PI	3 , 4
Kp and Ki for torque control PI	3 , 0.6
Kp and Ki for RSC (current regulation)	1.896 , 60.9162
Kp and Ki for RSC (voltage regulation)	0.87946 , 60.905
Kp and Ki for GSC (current regulation)	4.158 , 500

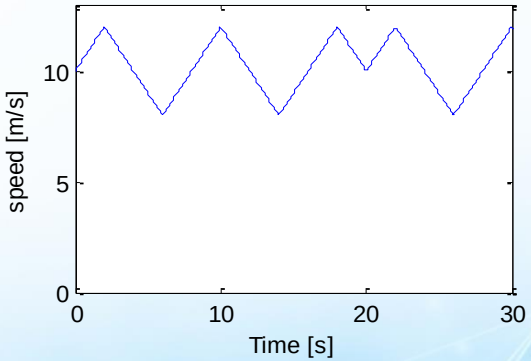

Wind speed profile.

5.1 Wind turbine performance

Since the wind turbines are similar and present the same behavior, it is enough to present the performance of the first wind turbine.

Figure 1 and Figure 2 show the behavior of the three-phase currents and voltages generated by each DFIG. It is clear that the voltages and currents are perfectly stable and sinusoidal during steady-state operation.

Figure 3 shows the active and reactive powers generated by the wind turbine. These powers are controlled by the rotor side converter (RSC).

Figure 4 shows the DC bus voltage, thanks to the grid side converter control (GSC) the DC bus is almost a constant value, in which the DC voltage can be maintained at 1250V. A stable voltage at the DC bus could help the GSC to control the active and reactive powers.

The turbine and electromagnetic torques of the DFIG, as shown in Figures 5 and 6, respectively are following the wind speed profile in the aim to extract the maximum power. The sign of torques is as function of the slip sign. When the slip is negative (over-synchronism) the electromagnetic and mechanical torque are negative obviously in steady-state.

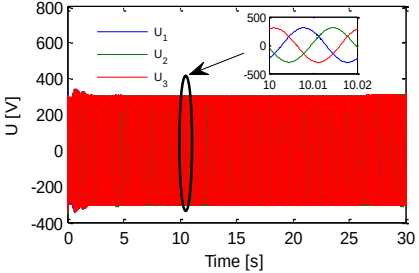

1- Wind generator voltage power

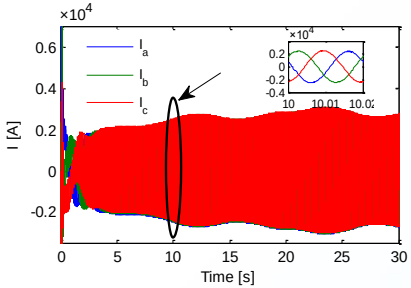

2-Wind generator currents

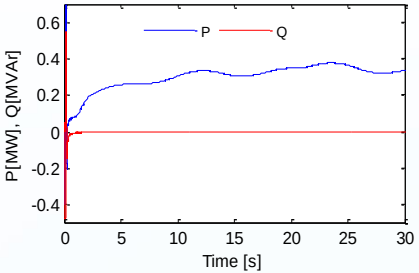

3- Wind generator active and reactive

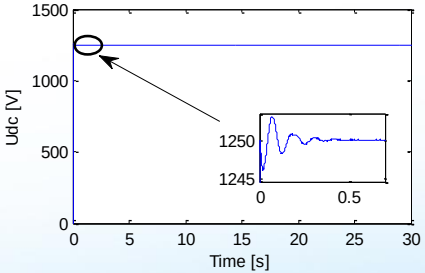

4- DC-bus voltage

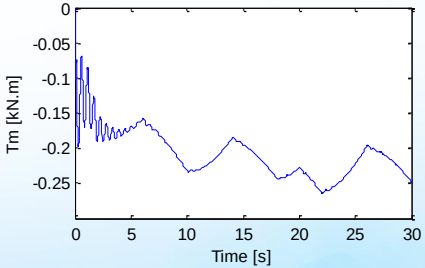

5-Turbine torque

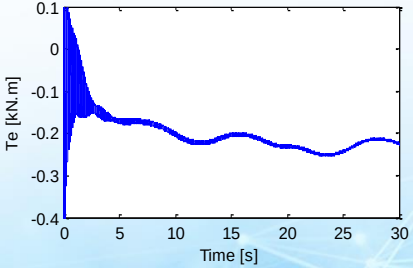

6- Electromagnetic torque.

OPAL-RT TECHNOLOGIES

RTI7 INNOVATE BEYOND

5.2 Wind farm and grid performances

In this part, the simulation results obtained at bus 6 are presented. The bus 6 is chosen as measurement bus because it is connected to the transformer that joints the wind farm to the power grid. At that bus, the three-phase voltages and currents are shown in figures 6 and 7, respectively.

It is can be seen that the waveforms are perfectly stable, and take sinusoidal shapes at steady-state.

The voltage takes the value of 200 kV after being increased by the transformer connected at bus 18 where the voltage was 25 kV.

Figure 8 presents the active and reactive powers measured at bus 6. It is interesting to notice that the active and reactive powers are totally decoupled.

The active power takes a value about -102 MW produced by the machine SM1 and wind farm, taking into account the loads consumption.

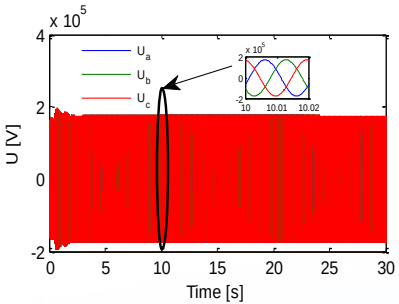

6- Bus 6 voltages.

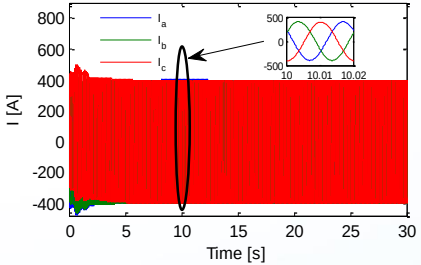

7-Bus 6 currents.

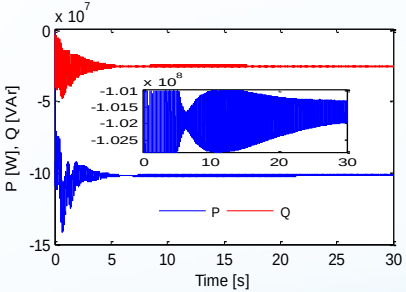

8-Bus 6 power.

5.3 System performance under faulty conditions

In order to exhibit the behavior of the proposed power system under faulty conditions the bus 6 is grounded at t=5s, and the applied three-phase fault lasted for 1s. The real simulations results under the bus 6 grounding are recorded at buses 1, 6, and line 5-6.

The following figures show the results obtained for buses 6,1 and line 5-6 under faulty conditions.

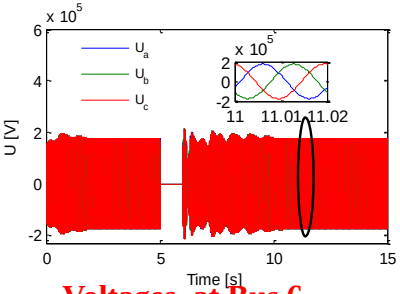

Voltages at Bus 6.

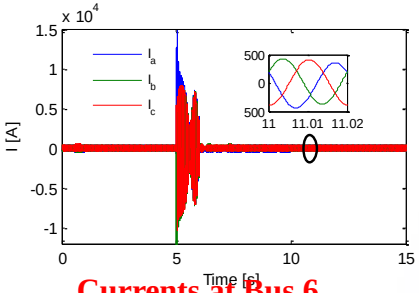

Currents at Bus 6.

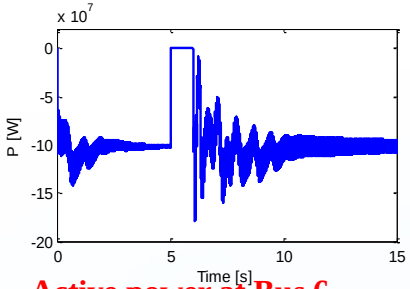

Active power at Bus 6.

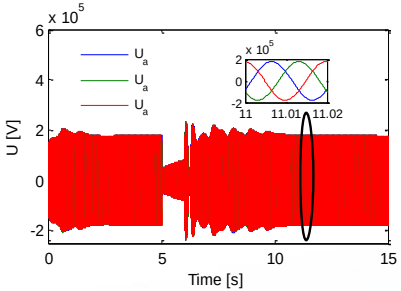

Voltages at Bus1

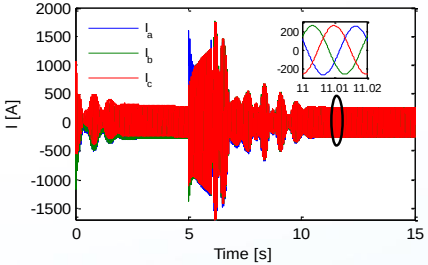

Currents at Bus1

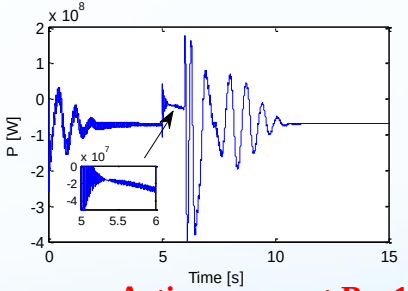

Active power at Bus1.

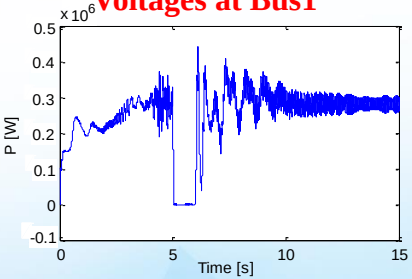

Wind generator active power.

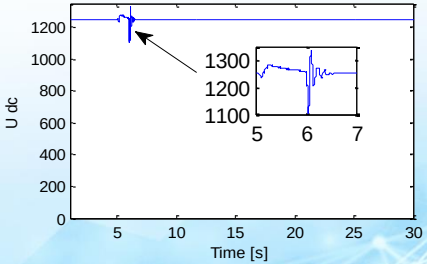

DC-bus voltage

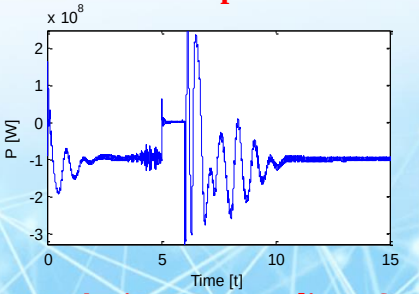

Active power at line5-6.

6. Conclusion

In this presentation, a detailed wind farm model based on DFIG connected to a large power system is designed and simulated using eMEGASim, real-time digital simulator, In order to allow for a higher level of wind turbines integration in electric grid without affecting the quality of the generated electric power.

Simulation results show clearly the good performance of the overall system based on eMEGASim, real-time. Indeed, with much less time consuming, this simulator has demonstrated to be an effective way to study interactions between complex nonlinear power system components as in real operating conditions.

THANK YOU

Laboratoire SCAMRE ENPOran
Simulation, Commande, Analyse et Maintenance des Réseaux Electriques

المدرسة الوطنية المتعددة التقنيات بوهران
polytech'Oran
ENPO

OPAL-RT TECHNOLOGIES

RTI7 INNOVATE BEYOND